NLS LIGHTING

MOSAIC SERIES

ARCHITECTURAL LIGHTING

Mosaic Series is a combination of security, beauty and vandal resistance that blends beautifully into any architectural environment.

Mosaic Series comes with flat glass lens in the top of the fixture with open sides and is designed to distribute light in Types 2, 3, and 5. Its illuminating glow is produced by silicone Micro Optics. Opal, Frosted or Amber side lenses can be ordered as options.

Available from 18 to 106 watts with Kelvin temperatures of 3000 (warm) and 4000 (neutral).

Mosaic Series conforms to strictest Made in America Standards. Designed, tooled, fabricated and assembled in the USA.

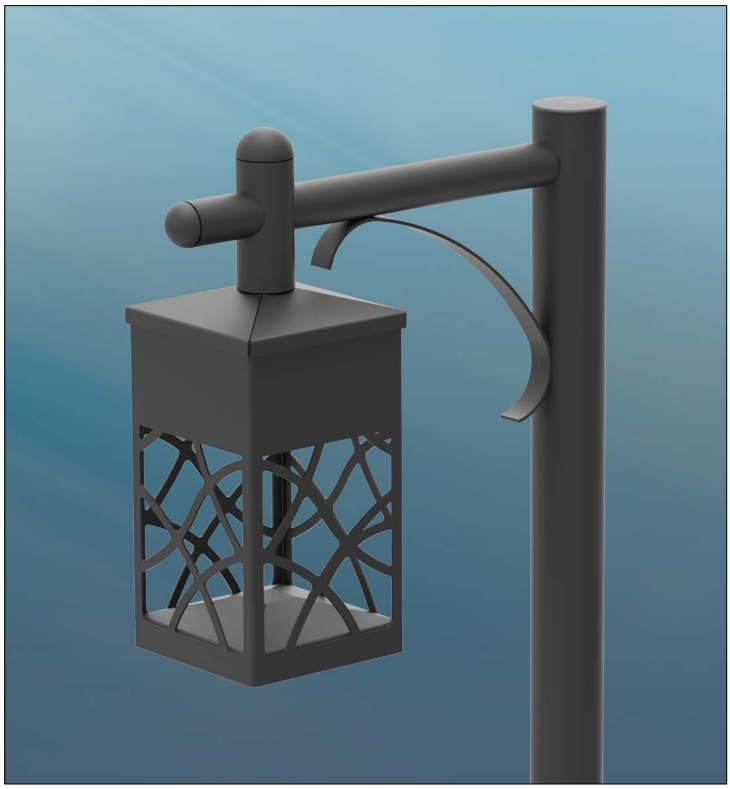

MICRO OPTIC SYSTEM

Our new cell-enclosed, micro optic silicone modules produce high clarity and outstanding performance.

LED WATTAGE CHART

	16L	32L
350 milliamps	18w	-
530 milliamps	28w	56w
700 milliamps	36w	71w
1050 milliamps	56w	106w

Project Name

Type:

Cat #	Tile Pattern	Light Dist	No. of LEDs	Milliamps	Kelvin	Volts	Color	Mounting	Lens	Options
Mosaic Series **(MOS-1)** Mosaic Series **(MOS-2)**	Web-Tile **(W)** M-Tile **(M)** **Consult Factory for Custom Tile Pattern*	Type 2 **(T2)** Type 3 **(T3)** Type 5 **(T5)**	16 **(16L)** 32 **(32L)**	350 **(35)** **16L Only* 530 **(53)** 700 **(7)** 1050 **(1)**	3000K **(30K)** 4000K **(40K)**	120-277 **(UNV)** 347-480 **(HV)**	Bronze **(BRZ)** White **(WHT)** Silver **(SVR)** Hunter Green **(HGN)** Black **(BLK)** Graphite **(GPH)** Grey **(GRY)** Custom **(CS)**	Arm Mount **(AM)** Post Top **(PT)** Wall Mount **(WM)**	No Side Lens **(NSL)** **Standard* Opal Side Lens **(OSL)** Frosted Side Lens **(FSL)** Amber Lens **(AMB)**	Surge Protector **(10K)** Photocell **(PC)** **Universal Voltage 120-277* Top Shade **(TS)** FSP-211 with Motion Sensor (UNV Voltage) *For 8' + Below* **(FSP-8)** *For 9' to 20'* **(FSP-20)**

PRODUCT SPECIFICATIONS

Housing: Heavy Duty Aluminum. 3003-H14 Alloy
LED: Lumileds Luxeon MX. CRI 70
Optics: Micro Optics Types 2, 3 and 5
Watts: 18-106
Listings: Conforms to UL 1598 Standards

Driver: 0-10V Dimming driver as standard by Philips Advance
THD @ Max Load < 15%
Power Factor @ Max Load < 0.95
Kelvin: 3000, 4000
Finish: 3-5 mils Powder Coat
Warranty: Standard Warranty is 5 years for Driver and LEDs

PRODUCT DIMENSIONS

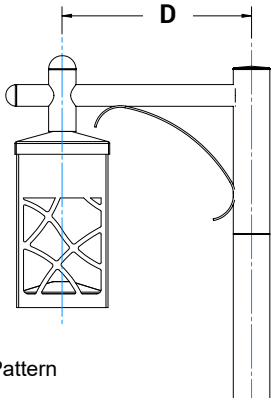

MOS-1
with Web-Tile Pattern

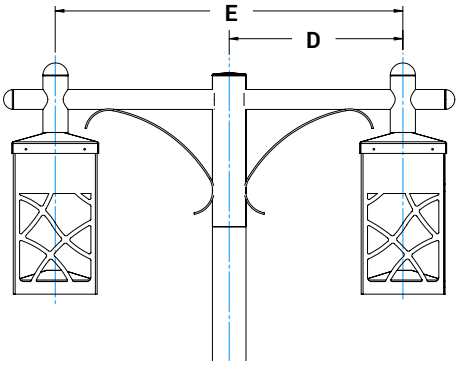

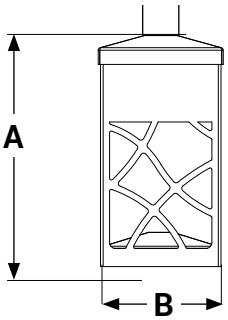

MOS-1
with Web-Tile Pattern

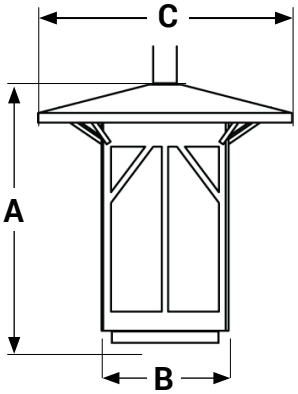

MOS-2-TS (with Top Shade Option)
with M-Tile Pattern

DIMENSION	MOS-1	MOS-2	MOS-2-TS
A	19 in.	22 in.	22 in.
B	10 in.	12 in.	12 in.
C	-	-	20.75 in.
D	21 in.	24 in.	24 in.
E	42 in.	48 in.	48 in.

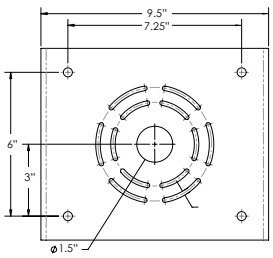

Wall Mount Bolts to Standard Junction Box